Cost-Effectiveness of Sirolimus-Eluting Stents in Percutaneous Coronary Interventions in Brazil

Carisi Anne Polanczyk, Marco V. Wainstein, Jorge Pinto Ribeiro

Hospital de Clínicas de Porto Alegre, Programa de Pós-graduação em Cardiologia da UFRGS e Hospital Moinhos de Vento – Porto Alegre, RS - Brazil

Summary

Objectives: To compare the cost-effectiveness ratios of sirolimus-eluting stents (SES) with bare-metal stents (BMS) under two perspectives: the "supplementary medical system" (health plans and private patients) and the public health (SUS) system.

Methods: A decision-analytic model using three different therapeutic strategies for coronary lesions: percutaneous coronary intervention (PCI) with BMS; with SES; or with BMS followed by SES to treat symptomatic restenosis. Study endpoints were one-year event-free survival and life expectancy. Decision trees were constructed using the results of published registries and clinical trials.

Results: One-year restenosis-free survival was 92.7% with SES and 78.8% with BMS. Estimated life expectancy was very similar for all the strategies, ranging from 18.5 to 19 years. Under a nonpublic perspective, the cost difference in the first year between BMS and SES was R$3,816, with an incremental cost-effectiveness ratio of R$27,403 per event avoided in one year. Under the SUS perspective, the cost per event avoided in one year was R$47,529. In the sensitivity analysis, probability of restenosis, risk reduction expected with SES, the price of the stent and cost of treating restenosis were all important predictors. In the Monte Carlo simulation, data per years of life saved showed very high cost-effectiveness ratios.

Conclusion: In the Brazilian model, the cost-effectiveness ratios for SES were elevated. The use of SES was more favorable for patients with high risk of restenosis, as it is associated with elevated costs in restenosis management of and under a nonpublic perspective.

Key words: Stents/economics; pharmacologic stents; sirolimus; angioplasty, transluminal, percutaneous coronary; National Health System (BR).

Introduction

Compared with conventional balloon angioplasty, elective stent implantation results in a significantly higher success rate, decrease in angiographic restenosis, and reduction in subsequent target-lesion revascularization[1-3]. Coronary stenting has emerged as the major myocardial revascularization technique throughout the world, accounting for more than 90% of the catheter-based percutaneous interventions. The ever-growing number of stents implanted in Brazil is documented by the National Registry of Cardiovascular Interventions (CENIC -Central Nacional de Intervenções Cardiovasculares), from only 37% during the 1999/2000 biennium[4], with a 2.44-fold increase from 1996 to 2004[5]. Data from the Health Ministry's Unified Health System (DATASUS) show that approximately 33,040 stents were implanted from September 2004 to August 2005 (2294, on average, per month).

However, in-stent restenosis remains the main limitation of this form of percutaneous intervention. Restenosis is a progressive process, resulting in additional morbidity and costs, particularly due to the need for repeat target-lesion revascularization. A number of clinical trials conducted over the last years have shown a significant reduction in hyperplastic response following drug-eluting stent (DES) implantation[6-8]. The use of DES, as compared with BMS, significantly reduces the rate of target-vessel revascularization, with no effect on all-cause mortality or myocardial infarction[9-11].

Nonetheless, this greater effectiveness of drug-eluting stents is associated with higher therapeutic costs. Economic analyses performed in the United States show that the use of sirolimus-eluting stents results in an incremental cost-effectiveness ratio of approximately US$1,650 per event avoided in one year and US$27,500 per quality-adjusted life years (QALY)[12]. Yet, cost-effectiveness studies conducted in other countries reported widely varying figures, ranging from Can$58,721/QALYs in Canada to €73,282/QALYs in Switzerland[13,14]. As Brazilian economic structure and delivery of health services are very different from other countries, these data cannot not be extrapolated to our reality, and studies based on national practice, both in the public and private sectors, are needed. Therefore, this study provides a cost-effectiveness analysis of sirolimus(rapamycin)-eluting stenting in different clinical settings in Brazil.

Mailing address: Carisi Anne Polanczyk •
Rua Gen. Oscar Miranda, 160/1001 – 90440-160 – Porto Alegre, RS - Brazil
E-mail: carisi@terra.com.br
Manuscript received December 14, 2006; revised manuscript received December 28, 2006; accepted January 11, 2007.

Methods

Description of the economic evaluation - A decision-analytic model was constructed to compare both the costs and effectiveness of three therapeutic strategies for patients with symptomatic coronary artery disease. (a) percutaneous coronary intervention (PCI) with bare-metal stent; (b) PCI with sirolimus-eluting stents (c), and PCI with BMS followed by SES for symptomatic restenosis.

Population model - The study population was designed for cohorts of patients with symptomatic, single-vessel disease that could undergo any of the three strategies. It was assumed that the cohort would be composed of subjects whose characteristics were similar to those described in clinical trials, that is, mean lesion length of 14 mm, vessels ranging from 2.5 to 3.5 mm in diameter, and a representative number of diabetics [6,7]. Although the initial model does not stratify the study population in these risk groups, the impact of these demographic variables on the incidence of restenosis, effectiveness, and global costs is evaluated in the sensitivity analyses.

Study endpoints - Study endpoints were the following: one-year event-free survival, expressed in percentages; and life expectancy, expressed in years of life. These endpoints were selected for the cost-effectiveness analysis because they provide both a readily quantifiable aspect of the benefit afforded by percutaneous coronary interventions and thorough cost analysis. The endpoint "quality-adjusted life years (QALYs)" could not be included, since no quality of life studies in patients with angina or symptoms of ischemic heart disease were found on the Brazilian population.

Description of the clinical decision model - The clinical decision tree was divided into two models: the short-term version and the Markov model. Figure 1 shows the early therapeutic decisions, as well as immediate and short-term (6 months) endpoints for each strategy. Figure 2 shows the simulation for the cohort that survived the procedure, including those who remained free of events for six months or experienced restenosis and underwent repeat revascularization. The second part is a Markov Model (transitional states) for the whole life after percutaneous or surgical revascularization. Noncardiac mortality per age group was established identically for all strategies, and survival tables for the Brazilian population in 2001 were estimated (www. Ibge/diretoria de pesquisas/). This structural model was described in other economic analysis with similar purposes[15].

Model assumptions - To prepare this model, strategies that attempt to reproduce the current practice were considered. In the bare-metal stent strategy, the following alternatives were offered for restenosis: percutaneous balloon angioplasty or coronary artery bypass graft (CABG) surgery. In this scenario, stent implantation for restenosis was considered only in cases of balloon dissection or poor outcome (estimated at 11%). In the event of restenosis in patients who received SES as initial treatment, the alternatives were similar, but if another stent was to be implanted, the same type of stent would be used. If the percutaneous intervention failed, either initially or after restenosis (failure to cross the lesion, failure to dilate the lesion, or occlusion), the patient was referred for CABG. Patients with subacute stent thrombosis would progress to fatal myocardial infarction or be referred for percutaneous intervention. In this study, CABG was considered only after PCI failed. During the first six months, patients might experience symptomatic or asymptomatic restenosis (recurrent stenosis >50% in luminal diameter). Only symptomatic cases were considered for target-vessel revascularization. Patients with recurrent symptoms of restenosis could undergo at most three percutaneous intervention attempts before being referred for CABG. Patients who remained asymptomatic

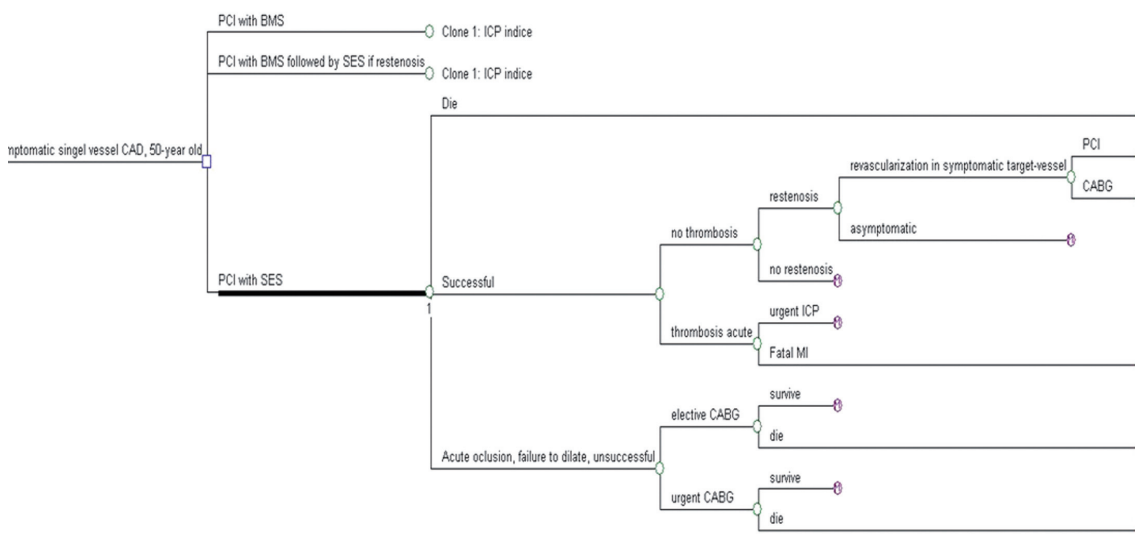

Fig. 1 - *Decision analytic model, considering three PCI strategies, plus baseline and postprocedural course.*
BMS - bare-metal stent; CABG - coronary artery bypass graft; CAD - coronary; PCI - percutaneous coronary intervention; SES - sirolimus-eluting stent.

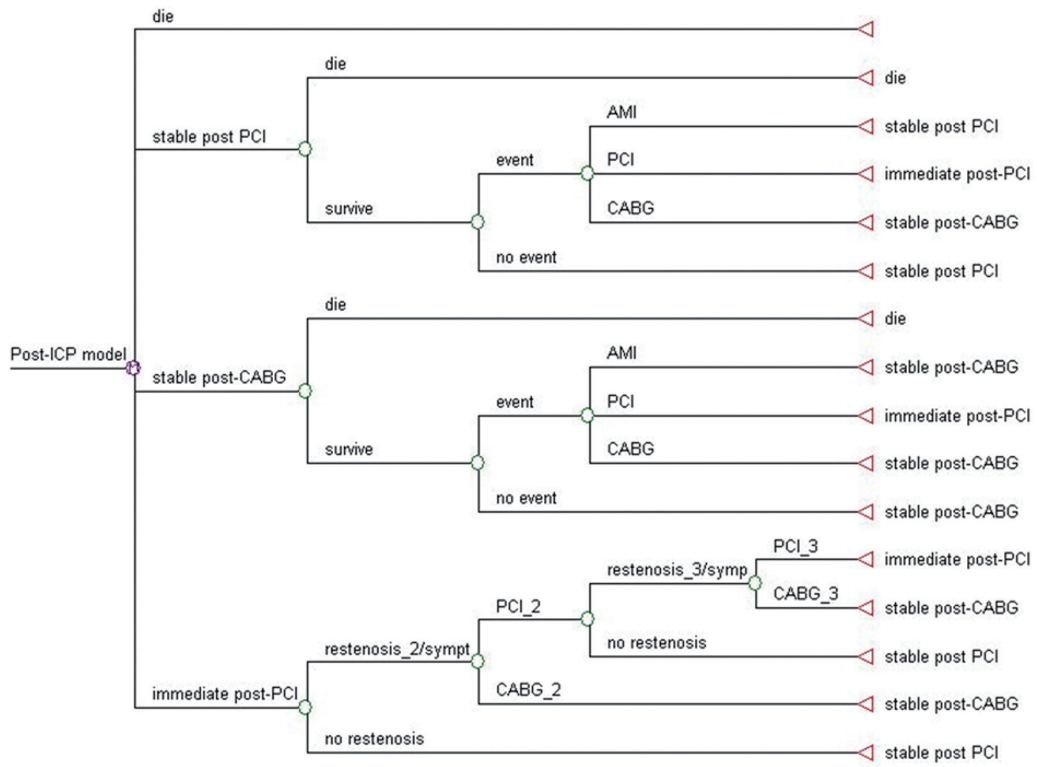

Fig. 2 - *Markov model, post-PCI course in the stable phase of ischemic heart disease.*

after the first six months were regarded as free of procedure-related events and entered the Markov model of the natural history of ischemic heart disease following revascularization. An average of 3-6 months of exposure to clopidogrel was considered. In the context of this analysis, the possibility of late thrombosis with SES was not taken into account. Patients who entered the Markov model after revascularization could progress to four health states during their lifetime: death, stable after PCI, stable after CABG, or experience angina. Angina patients were immediately referred for PCI. In the Markov Model, all future costs and health benefits were discounted 3% per year.

Effectiveness analysis - The results of the main clinical endpoint and probabilities needed in the decision analytic model are listed in Tables 1 and 2. Estimates were derived from the literature, by means of a systematic review of the randomized clinical trials published up to 2003 involving bare-metal stents and data from multinational registries of PCI (SIRIUS, C-SIRIUS, E-SIRIUS, Cypher-restenose[6-9,11].

Index procedure cost - Index procedure cost was calculated assuming two different perspectives for the study. For the perspective of the nonpublic payer, information was collected on the mean hospitalization cost for PCI with bare-metal and sirolimus-eluting stenting in eight different Brazilian hospitals (Table 2). Values obtained were general and based on information provided by reference institutions. In this model, baseline estimate was derived from financial analysis reports of similar cases in a private hospital, that is to say, the actual amount charged by the health care service provider to the health plan/patient (Table 3). Cost variations found in other institutions were used in the sensitivity analyses. Under the perspective of the public payer, mean costs of interventions were obtained considering the public health system in Brazilian hospitals affiliated with SUS, using as reference the amounts reimbursed by similar admissions. For percutaneous interventions, a review was carried out of 436 procedures performed during 2002, 159 CABG surgery, 58 acute myocardial infarction, and 262 admissions for acute coronary insufficiency. For the strategy of using SES, the market price of the stent was added to the procedural cost, since it is not listed in the SUS reimbursement table (Table 3).

Medical fees were not considered in the baseline analyses, assuming they were similar for the different strategies, regardless of the stent used. However, as this information was also not included for restenosis procedures, there might be a bias in the comparison. In this respect, other sensitivity analyses were conducted by adding a fixed amount (R$400 to R$1,200) per procedure according to the AMB (Brazilian Medical Society) medical fee schedule. Under the SUS perspective, they are included in the total cost of the procedure. Likewise, the additional cost of the anti-platelet agent clopidogrel during three to six month post-procedure

Table 1 - Baseline estimates of the decision analytic model: procedural phase for bare-metal stent (BMS) and sirolimus-eluting stent (SES)

Variables	BMS	Range	SES	Range	Ref:
Procedure-related mortality	0.007	0.002-0.02	0.007	0.002-0.02	11,16
Probability of failure to dilate or cross the lesion	0.025	0.015-0.05	0.025	0.025	17
Probability of emergency surgery	0.01	0.006-0.014	0.01	0.01	11,16
Probability of subacute thrombosis	0.0036	0.05-0.30	0.0036	0.05-0.30	17
Probability of fatal AMI in subacute thrombosis	0.087	0.05-0.10	0.087	0.05-0.10	17
Angiographic restenosis rate					
- De novo lesion	0.30	0.10-0.50	0.06*	0.02-0.15	11,18
Restenosis (multiple)	0.54 (1.85)	(1.5 – 2.1)	0.06	0.02-0.15	19
Probability of symptoms with angiographic restenosis (target-vessel revascularization)	0.60	0.10-0.80	0.60	0.10-0.80	11,18
Probability of PCI for restenosis	0.88	0.50-1	0.88	0.50-0.74	20,21
Probability of CABG for restenosis	0.12	0-1	0.12	0-1	20,21
Angiographic success	0.97		0.97		16

**Relative risk reduction of 80%, compared with the expected restenosis rate with bare-metal stent; PCI - percutaneous coronary intervention; CABG - Coronary artery bypass graft (CABG) surgery.*

Table 2 - Estimates for the model: Stable phase of ischemic heart disease

Variables	Baseline	Range	Ref.:
Mortality after emergency CABG	0.05	0.02-0.10	22
Mortality after elective CABG	0.03	0.05-0.05	22, 23
Annual cardiac mortality after CABG	0.01	0.01-0.05	23, 24
Annual cardiac mortality after PCI	0,02	0.01-0.05	23, 24, 25
Annual probability of post-PCI events	0,22	0.09-0.30	24, 25
Non-fatal AMI after PCI	0,05	0.04-0.06	23, 24, 25
Late PCI after PCI	0,13	0,10-0.20	23, 24, 25, 26
Late CABG after PCI	0,04	0.02-0.08	23, 24, 25
Annual probability of post-CABG events	0,09		
Non-fatal AMI after CABG	0,03	0.02-0.07	23, 24
Late PCI after CABG	0,03	0.02-0.04	23, 24
Late CABG after CABG	0,03	0.01-0.06	23, 24, 26

PCI - percutaneous coronary intervention; CABG - coronary artery bypass graft (CABG) surgery; AMI - acute myocardial infarction.

was not considered a direct cost under the payer perspective, but was included in the sensitivity analyses.

Cost of stable ischemic heart disease management - The costs of treating stable ischemic heart disease were estimated based on a cohort of patients with ischemic heart disease who have been under follow-up for four years in a specialized cardiac outpatient clinic. This cohort provided information on mean medical fees, invasive and non-invasive diagnostic tests, other laboratory tests, and current medication prescribed for secondary prevention and management of symptomatic patients [22]. In estimating the annual cost of ischemic heart disease management, two scenarios were considered, namely: values of the SUS and Brazilian Medical Association reimbursement tables (sensitivity analyses). All costs included took into account the mean values in 2003, in Brazilian reals (R$)

Data analysis - For each strategy, the expected cost was calculated and clinical endpoints were described (one-year free-event survival and life expectancy in years of age). Strategies were ranked in increasing order of cost, and those less beneficial and more expensive were excluded by dominance. For the more beneficial and more expensive strategies, the incremental cost-effectiveness ratio was calculated and compared with that immediately less expensive. For all variables included in the model, sensitivity analyses of

Table 3 - Estimates for the model: Procedural and outpatient costs

Variables	SUS		Health plans/private patients	
	BMS	SES	BMS	SES
Index procedure	R$4,210.00	11,762.00	R$10,195.00	R$15,889.00
(stent, mean cost)	R$2,707.00	10,320.00	R$4,527.00	R$10,320.00
Restenosis management				
PTCA + stent*	R$1,738.00		R$3,930.00	
PTCA + sirolimus-eluting stent**	R$2,577.00		R$4,567.00	
PCI w/ sirolimus-eluting stent***	R$10,787.00		R$15,247.00	
CABG				
Elective	R$5,967.00		R$21,826.00	
Emergency	R$8,950.50		R$26,214.00	
Index acute myocardial infarction	R$5,155.00		R$11,812.00	
Annual after PCI or stable CABG, without events	R$1,383.00		R$1,465.00	
Cardiac catheterization	R$539.00		R$1,276.00	
Mean PCI cost/ balloon PTCA	R$4,210.00 / R$1,442		R$10,195.00 / R$3,432	
Death from CAD	R$2,577.00		R$5,906.00	

*Restenosis management: * with balloon angioplasty + 11% bare-metal stent; * balloon angioplasty + 11% bare-metal stent; *** sirolimus-eluting stent.*

one and two entries were performed, within ranges available in the literature or those clinically plausible. To estimate the impact of the different strategies on life expectancy more accurately, a Monte Carlo simulation was performed with 10,000 random trials. The model and analyses were performed using the DATA program developed by Treeage software Inc. (version 4.8, 2003).

Results

Effectiveness - One-year restenosis-free survival was 92.7% with the sirolimus-eluting stent strategy, 78.8% with the bare-metal stent strategy, and 78.8% with the sirolimus-eluting stent followed by bare-metal stent strategy for restenosis. The absolute difference between the first two strategies was 14%, similar to that of the SIRUS trial and aggregate analyses [11]. No significant difference was found between the last two strategies, because the benefit of sirolimus-eluting stent was offered only after the restenosis endpoint was reached.

Based on the above mentioned assumptions, the analytic model predicted that, for 50-year old symptomatic patients with coronary lesion and indication for revascularization, life expectancy is very similar in all strategies assessed - between 18.5 and 19 years of age. This is indeed lower than the 25 years expected for the Brazilian population in general in 2001 (www.ibge.com.br).

Costs - Under the perspective of non-public institutions, the cost for treating index coronary lesion in the first year was R$14,024 using bare-metal stent, R$15,128 using bare-metal stent followed by sirolimus-eluting stent for restenosis, and R$17,840 using sirolimus-eluting stent. The cost difference between bare-metal and sirolimus-eluting stenting was R$3,816 (Figure 3). Estimated lifetime cost was R$86,218 (or R$4,668 per year) for bare-metal stent; R$85,803 (or R$4,617 per year) for sirolimus-eluting stent; and R$80,913 (or R$4,377 per year) for bare-metal stent followed by sirolimus-eluting stent for estenosis.

Under the perspective of public institutions (SUS), the cost for treating index coronary lesion during the first year was R$5,788 using bare-metal stent, R$7,102 using bare-metal stent followed by sirolimus-eluting stent for restenosis, and R$12,708 using sirolimus-eluting stent. The cost difference between using bare-metal stent and sirolimus-eluting stent was R$6,619. Estimated lifetime cost was R$47.643,00 (or R$2,570 per year) for bare-metal stent; R$53,565 (or R$2,877 per year) for sirolimus-eluting stent; and R$47,604 (or R$2,566 per year) for bare-metal stent followed by sirolimus-eluting stent for restenosis.

Cost-effectiveness - Under the perspective of non-public institutions, one-year event-free survival was higher with sirolimus-eluting stent, but at a higher cost, resulting in an incremental cost-effectiveness ratio of R$27,403 per event avoided in one year (Table 4). The strategy of using sirolimus-eluting stent only for restenosis was associated with a higher cumulative cost than that of bare-metal stent, but yielding the same clinical benefit, so that, in this short-term endpoint, it was considered dominated.

Under the perspective of public institutions, one-year event-free survival was higher with sirolimus-eluting stent, but at a higher total cost, resulting in an incremental cost-effectiveness ratio of R$47,529 per event avoided in one year. The strategy of using sirolimus-eluting stent only for conventional restenosis was also considered dominated in this scenario.

Table 4 - Cost-effectiveness ratio of the strategies, under the perspective of health plans and private patients and the SUS

Strategies	One-year effectiveness	Difference in effectiveness	Cost, R$	Cost difference R$	Incremental cost-effectiveness ratio
Perspective of health plans and private patients					
Bare-metal stent	78.8	-	14,024		
Bare-metal stent followed by sirolimus-eluting stent for restenosis	78.8	0.01	15,128	1104	Dominated
Sirolimus-eluting stent	92.7	13.8	17,840	3816	27,403
SUS perspective					
Bare-metal stent	78.8	-	5.788		
Bare-metal stent followed by sirolimus-eluting stent for restenosis	78.8	0.01	7102	1314	Dominated
Sirolimus-eluting stent	92.7	13.8	12,708	6619	47,529

C/E - custo-efetividade; SUS - Sistema Único de Saúde.

Sensitivity analysis - Some variables had significant impact on the results. From the clinical standpoint, the probability of symptoms in the presence of angiographic restenosis, the estimated probability of baseline restenosis with bare-metal stent, and the expected risk reduction with sirolimus-eluting stent all affected the estimates. The more likely the symptoms, the more favorable the use of sirolimus-eluting stent. For example, raising this probability rate of symptoms caused by angiographic restenosis from 60% to 88%, event-free survival with bare-metal stent would fall from 78% to 71%, and with sirolimus-eluting stent, from 93% to 90%, resulting in an incremental cost-effectiveness ratio for sirolimus-eluting stent of R$6,744 per avoided event, under the perspective of non-public institutions. The inclusion of medical fees did not change these findings. The cost-effectiveness ratio for sirolimus-eluting stent compared with bare-metal stent fell from R$27,403 to R$26,860, assuming an amount of R$400 for this variable under the perspective of health plans.

Under the SUS perspective, the model also proved to be robust in most variables and assumptions considered. The variables which most influenced the results were the following: probability of symptoms in the presence of angiographic restenosis, estimated probability of baseline restenosis with bare-metal stent, and expected risk reduction with sirolimus-eluting stent. With regard to costs, again, the cost of both sirolimus-eluting stent and restenosis management determined our findings.

Under the perspective of non-public institutions, the baseline probability of restenosis with bare-metal stent is a determinant of the effectiveness and cost of both strategies. Assuming a 20% lower expected clinical restenosis, the cost-effectiveness of sirolimus-eluting stent becomes much more unfavorable, more than R$50,000 per one-year event-free survival. On the other hand, when expected restenosis is higher than 40%, the cost-effectiveness ratio is less than R$15,000 per one-year event-free survival (Figure 4). This trend was maintained in the analysis under the perspective of public institutions of the Unified Health System (Figure 4).

Some economic determinants also influenced our results, changing rates of strategies. Among them, the cost of index procedure, basically that of sirolimus-eluting and bare-metal stents, as well as its rate and the cost of restenosis management affected the resulting data. Under the perspective of non-public institutions, if the sirolimus-eluting stent cost less than R$6,600, its use would be a dominant strategy from both clinical and economic standpoints, as compared with bare-metal stent. Within the range of R$6,600 to R$8,000, it would result in an additional cost of less than R$10,000 per avoided event, and from R$8,000 to R$9,400, between R$10,000 and R$20,000 (Figure 4). Varying another parameter concomitantly, if the probability of baseline restenosis was greater than 40%, these figures for sirolimus-eluting stent would be R$7,500, R$9,300, and R$11,100 for the abovementioned intervals, respectively. Figure 4 shows that the same trends were found under the perspective of SUS institutions, albeit with higher figures.

The cost of restenosis also influenced the obtained ratios. With an increase in this cost, similarly for both strategies, the drug-eluting stent strategy becomes more attractive. Under the perspective of private patients and health plans, if restenosis management is less than R$10,000, the use of sirolimus-eluting stent has an additional cost greater than R$20,000 per avoided restenosis; if it is between R$10,000 and R$19,000, the incremental cost-effectiveness ratio for the sirolimus-eluting stent ranges between R$10,000 and R$ 20,000 per avoided event; and if it is more than R$19,000, the cost for avoided event is less than R$10,000.

Strategy cost-effectiveness per year of life saved - Under the perspective of health plans and private patients, life expectancy was greatest with the PCI strategy with sirolimus-eluting stent, followed by bare-metal plus sirolimus-eluting stent for restenosis and bare-metal stent. Overall cost was highest for the first strategy and lowest for that of sirolimus-eluting stent only in cases of restenosis. The comparison of using sirolimus-eluting stent for restenosis and as initial treatment resulted in an incremental cost-effectiveness ratio of R$49,464 per year of life saved.

Under the perspective of the Unified Health System, the results were similar, with greater cost-effectivenss

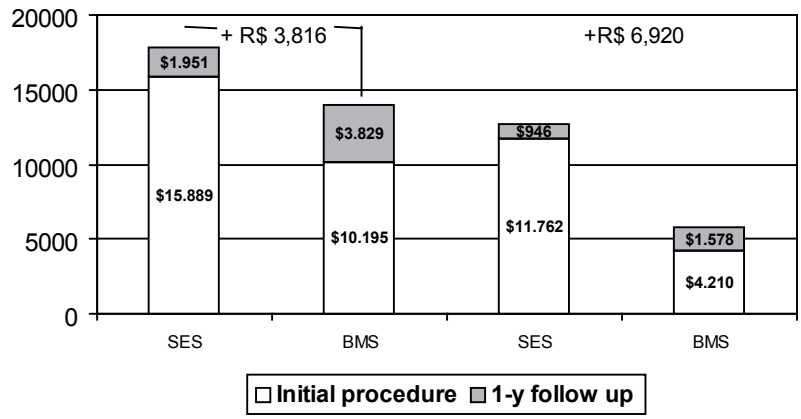

Fig. 3 - Health care costs in one year in the Brazilian model for health plans/private patients and the SUS (in R$ [reals] in 2003).

ratios, resulting in an incremental cost-effectiveness ratio of R$356,354 per year of life saved.

It should be emphasized that, although the estimates show an elevated incremental cost-effectiveness ratio with sirolimus-eluting stent and dominated for bare-metal stent, the Monte Carlo analysis with 10,000 simulations suggests that the strategies are very similar, with figures ranging from R$0 to R$10,000 per year of life saved. In more than 75% of the simulations, cost-effectiveness ratios were lower than these, for both scenarios.

Discussion

Technologies in the health care field are expanding rapidly, at unprecedented speed. In addition, in some specialities, such as cardiology, randomized clinical trials are being conducted virtually concomitantly with the commercialization of the products. This was seen in the mid-90s with bare-metal stents and, now, with drug-eluting stents. A study commissioned by the U.S Food and Drug Administration, before drug-eluting stents were released for use, indicated that, after one year, this stent would account for 77% of all devices used in percutaneous interventions. These data, albeit interesting, since they stimulate cardiologists' adherence to the advances achieved in the field, raise concern regarding the institutions financial health. Therefore, it is imperative that the clinical benefits of new technologies, as well as their costs, be quantified. Also important is whether there is an increment of both and a reasonable cost-benefit ratio.

In this study, the cost-effectiveness of three different strategies comparing the use of bare-metal stent and sirolimus-eluting stent was assessed using a decision analytic model applicable to the practice of interventional cardiology in Brazil. The initial higher cost of the sirolimus-eluting stent is partially offset over the first year. Comparing bare-metal and sirolimus-eluting stents, cost difference in one year was R$3,816 under the perspective of health plans and R$6,920 under the perspective of SUS, with one-year cost-effectiveness ratios per avoided event of R$27,403 for health plans and R$47,643 for the SUS. The additional costs deemed acceptable for a given clinical benefit derived from an intervention are yet to be established in Brazil. United States and Canada's health care systems use the reference of US$50,000 per quality-adjusted life years saved and, more recently, US$10,000 per major event avoided[12,15] using a reasonable amount of health resources. Based on these international references, the cost-effectiveness ratios of sirolimus-eluting stent could be considered economically attractive for health plans and private patients alike.

The strategy of using sirolimus-eluting stent was even more favorable in subgroups of patients, such as those at high risk of restenosis and those presenting high cost of restenosis management. Moreover, depending on the price of the sirolimus-eluting stent, the use of this intervention on a routine basis may be dominant or more attractive, from the standpoint of cost-effectiveness, for health plans. Even though the same trend was observed for the SUS, the amounts were always higher.

Thus far, several authors in other countries have evaluated the cost-effectiveness ratio of drug-eluting stents relative to bare-metal stents. In an analytic model, Cohen et al. have shown a cost of US$1,650 per revascularization avoided and US$27,500 per QALYs[12]. Another study conducted in the United States to evaluate paclitaxel-eluting stents has shown similar results, US$4,678 and US$47,798, respectively[27]. On the other hand, economic analyses conducted in Canada revealed that, overall, drug-eluting stents are not a cost-effective technology, perhaps unless used in high-risk patients. Their results for different provinces varied widely, ranging from Can$12,000-20,000 per avoided revascularization to Can$438,415 – 2,221.692 per QALYs[13,28-30]. These figures did not differ significantly from other countries, such as Australia and Italy[31].

To date, we have not found any formal economic cost-effectiveness analysis in Brazil. In an observational study, Quadros et al. has estimated the cost-effectiveness of replacing bare-metal stent for drug-eluting stent in a cohort of patients

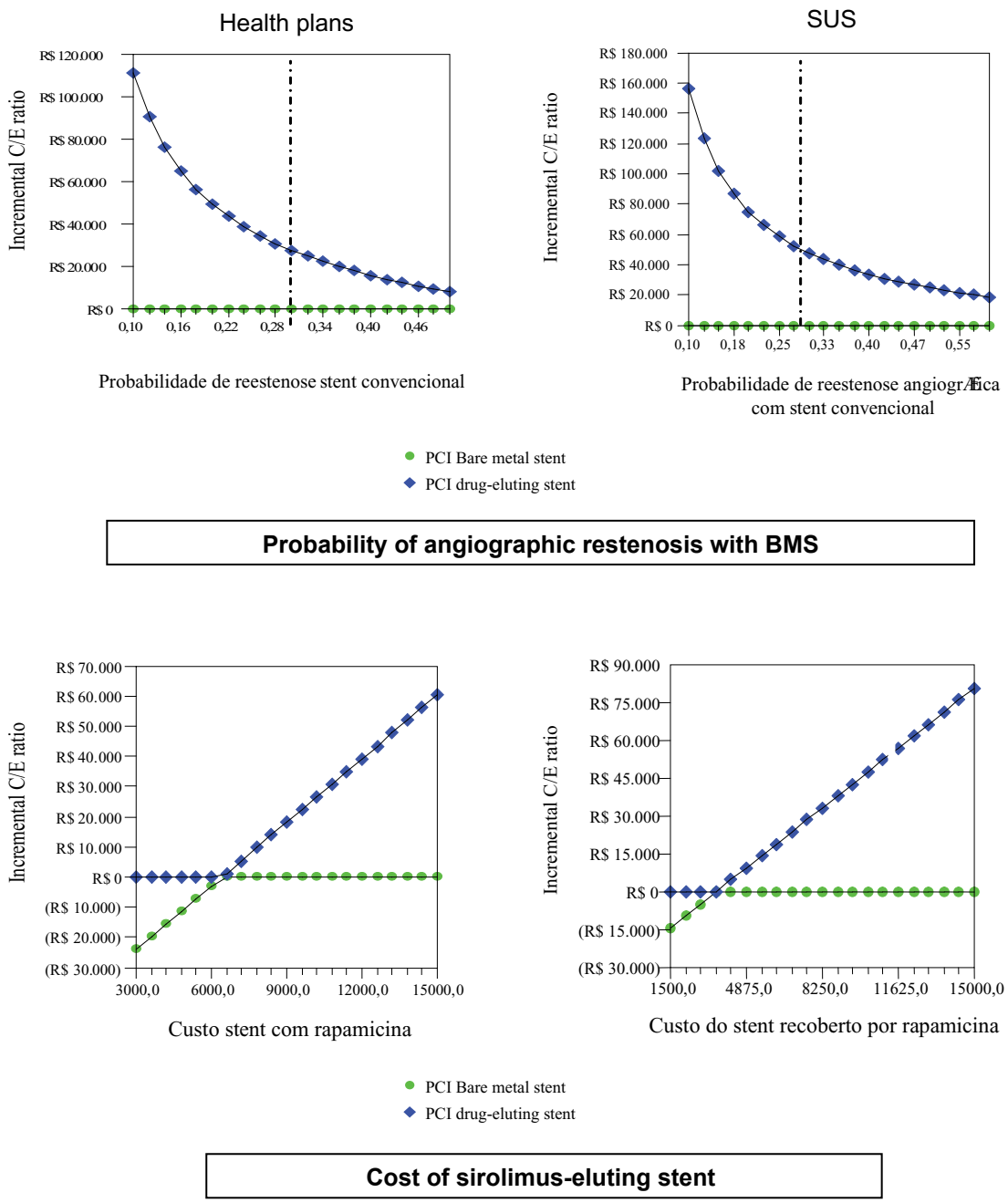

Fig. 4 - *UPPER PANELS - Sensitivity analysis of angiographic restenosis probability with bare-metal stent LOWER PANELS Sensitivity analysis of the cost of sirolimus-eluting stent The graphics on the left are based on the perspective of non-public institutions, and the graphics on the right are based on the perspective of the Unified Health System (SUS).*

who underwent PCI in a Brazilian public institution. It was estimated that, if drug-eluting stent were used, there would be an increment of R$9,524 per patient, with the cost per event avoided being over R$190,000. These figures were far higher than those described in other studies, probably because the target-vessel revascularization rate in the cohort with large vessels studied was as low as 5.8%[33].

Unlike these economic analyses based on analytic models, Kaiser et al. conducted a pragmatic randomized clinical trial in the context of the Swiss public health system and found clinical outcomes similar to those of SIRIUS and TAXUS. Under the perspective of the Swiss system, drug-eluting stenting cumulative costs increased by €905 in six months, resulting in a cost per procedure avoided of €18,311 and €72,283

per QALY gained. According to the authors, their results did not favor the incorporation of this technology[14].

Part of the variance in economic results may be explained by the peculiarities of each system and, particularly, by the difference in terms of cost with sirolimus-eluting stents. In addition, the initial estimate of clinical trials regarding the benefit of drug-eluting stent varies according to the authors' interpretation of its effect in their clinical practice.

The unfavorable cost-effectivess of drug-eluting stents just described may be enhanced in three ways: (i) increasing their clinical effectiveness – assuming the medium-term results of clinical trials, where a greater benefit could be derived in terms of the health system after the first two years; (ii) reducing their cost – all sensitivity analyses suggest the need for price reduction; (iii) making sure they are used in subgroups of high-risk patients, in whom the estimated incidence of restenosis would be more than three times greater than the reference value. According to our findings, it would be reasonable to say that the use of drug-eluting stent is cost-effective in patients with diabetes, small vessels or candidates for surgical revascularization who might develop restenosis.

Despite being beyond the scope of this study, it is also important that the financial impact of drug-eluting stents be estimated both in the public and private sectors, if they choose to use them. For example, in the analysis of the economic impact of total or partial replacement of drug-eluting stents using data from 2005 procedures under the SUS, excluding angioplasty without stent implantation and primary angioplasty, a total of 27,500 interventions were performed. Assuming that 1.2 stents were used per procedure, approximately 33,040 stents (2294 per month, on average) were implanted. The replacement of bare-metal stents for drug-eluting stents in 20% of the cases (high risk), at an additional cost of R$4,020.00, could have an impact of over R$26,000.000 in one year, even if the price of drug-eluting stents drops to half its current value in the Brazilian market (R$6,600 for drug-eluting stent and R$2,580 for bare-metal stent). Some authors argue that this initial increment would be partially offset by a decrease in the number of procedures in the near future and greater efficacy of the system [34]. However, whether costs will actually drop remains to be established, since the actual number of patients treated for coronary artery disease may increase.

Some considerations are relevant to the interpretation of our findings. Firstly, the estimated clinical benefit of the drug-eluting stent incorporated in this study was that described in randomized clinical trials using control angiography defined by protocol. It is known that these clinical trials tend to overestimate the indication for percutaneous procedures[31], a fact that was confirmed with the publication of patients registries undergoing drug-eluting stent implantations in which the absolute reduction of restenosis rates was lower than those of clinical trials[32,34]. Secondly, this was a hypothetical analytic model that sought to reproduce the practice used in most clinical situations, even though it is known that this area is fraught with heterogeneity. Thirdly, in Brazil, both the public health system and the "supplementary medical system" have distinctive characteristics in some regions, which might not have been represented in the model assumptions. At any rate, we used as reference the recognized clinical practice advocated in guidelines, using a model validated in similar studies.

Over the last year, evidence has emerged that drug-eluting stents are likely to cause late thrombosis, an event that could be associated with the discontinuation of dual antiplatelet therapy[37]. Autopsy studies of patients who died following drug-eluting stenting suggest that the basic mechanism of late thrombosis is the poor endothelialization at the implantation site[38]. Therefore, some authors recommend that the dual antiplatelet regime be maintained for at least one year, or even longer[39]. Additionally, a recent meta-analysis (40) has suggested that drug-eluting stents may be associated with increased noncardiac mortality as of 2 years of follow-up. As these data have not yet been corroborated by specific clinical trials, the present study evaluated the cost-effectiveness ratios considering the use of dual antiplatelet therapy during three months for drug-eluting stents. However, if long-term use of two antiplatelet agents is indicated, the costs calculated for drug-eluting stents are likely to be even higher.

Although study results suggest unfavorable cost-effectiveness for the routine use of drug-eluting stents, it is expected that technology will continue to evolve, cost will drop, and benefits will be optimized, as occurred with bare-metal stents a decade ago. Either way, the time has come for the cardiology community to collect prospective, validated data about clinical practice, endpoints, and long-term costs of cardiac procedures and interventions. In keeping with models adopted by other countries[35], an effective system will be able to provide concrete information about the benefit, cost, and performance of existing and emerging technologies, enabling their safe and rational use based on the Brazilian reality.

Potential Conflict of Interest

This study was sponsored by Cordis do Brasil, a company that manufactures drug-eluting stents. The authors were free to analyze, interpret, and report the results.

References

1. Serruys PW, de Jaegere P, Kiemeneij F, Macaya C, Rutsch W, Heyndrickx G, et al. A comparison of balloon-expandable-stent implantation with balloon angioplasty in patients with coronary artery disease. Benestent Study Group. N Engl J Med. 1994; 331: 489-95.

2. Fischman DL, Leon MB, Baim DS, Schatz RA, Savage MP, Penn I, et al, for the Stent Restenosis Study Investigators. A randomized comparison of coronary-stent placement and balloon angioplasty in the treatment of coronary artery disease. N Engl J Med. 1994; 331: 496-501.

3. Versaci F, Gaspardone A, Tomai F, Crea F, Chiariello L, Gioffre PA. A comparison of coronary artery stenting with angioplasty of the left anterior descending coronary artery. N Engl J Med. 1997; 336: 817-22.

4. Sousa AG, Mattos LA, Campos Neto CM, Carvalho HG, Stella FP, Nunes G. Intervenções percutâneas para revascularização do miocárdio no Brasil em 1996 e 1997 comparadas às do biênio 1992 e 1993. Dados do registro

CENIC. Arq Bras Cardiol. 1998; 70: 423-30.

5. Mangione JA. Intervenção coronária percutânea no Brasil. Quais são os nossos números? Rev Bras Cardiol Invas. 2006; 14: 267-72.

6. Souza JE, Costa MA, Abizaid AC, Rensing BJ, Abizaid AS, Tanajura LF, et al. Sustained suppression of neointimal proliferation by Sirolimus-eluting stents: one-year angiographic and intravascular ultrasound follow-up. Circulation. 2001; 104: 533-8.

7. Morice MC, Serruys PW, Sousa JE, Fajadet J, Ban Hayashi E, Perin M, et al. A randomized comparison of a Sirolimus-eluting stent with a standard stent for coronary revascularization. N Engl J Med. 2002; 346: 1773-80.

8. Leon MB, Moses JW, Popma JJ. A multicenter randomized clinical study of the Sirolimus-eluting stent in native coronary lesions: angiographic results. Circulation. 2002; 106: II-393.

9. e-Cypher Investigators. E-Cypher – an international internet-based registry of the Cypher™ Sirolimus-eluting coronary stent. Presented at Cordis Symposium at PCR, Paris, May; 2003.

10. Babapulle MN, Joseph L, Belisle P, Brophy JM, Eisenberg MJ. A hierarchical Bayesian meta-analysis of randomised clinical trials of drug-eluting stents. Lancet. 2004; 14; 364: 583-91.

11. Moses JW, Leon MB, Pompa JJ, Fitzgerald PJ, Holmes DR, O'Shaughnessy C, et al, for the SIRIUS Investigators. Sirolimus-eluting stents versus standard stents in patients with stenosis in a native coronary artery. N Engl J Med. 2003; 349: 1315-23.

12. Brophy JM, Belisle P, Joseph L. Evidence for use of coronary stents. A hierarchical Bayesian meta-analysis. Ann Intern Med. 2003; 138: 777-86.

13. Cohen DJ, Bakhai A, Shi C, Githiora L, Lavelle T, Berezin RH, et al. Cost-effectiveness of Sirolimus-eluting stents for treatment of complex coronary stenoses. Circulation. 2004; 110: 508-14.

14. Shrive FM, Manns BJ, Galbraith PD, Knudtson ML, Ghali WA. Economic evaluation of Sirolimus-eluting stents. Can Med Assoc J. 2005; 172: 345-51.

15. Kaiser C, Rocca HPB, Buser PT, Bonetti PO, Osswlad S, Linka A, et al., for the BASKET Investigators. Incremental cost-effectiveness of drug-eluting stents compared with a third generation bare-metal stent in a real world setting: randomised Basel Stent Kosten Effektivitäts Trial (BASKET). Lancet. 2005; 366: 921-9.

16. Cohen D, Breall JA, Ho KKL, Kuntz RE, Goldman L, Baim DS, et al. Evaluating the potential cost-effectiveness of stenting as a treatment for symptomatic single-vessel coronary disease. Use of a decision analytic model. Circulation. 1994; 89: 1859-74.

17. Anderson HV, Shaw RE, Brindis RG, Hewitt K, Krone RJ, Block PC, et al. A contemporary overview of percutaneous coronary interventions. The American College of Cardiology-National Cardiovascular Data Registry (ACC-NCDR). J Am Coll Cardiol. 2002; 39: 1096-103.

18. Cheneau E, Leborgne L, Mintz GS, Kotani J, Pichard AD, Satler LF, et al. Predictors of subacute stent thrombosis: results of a systematic intravascular ultrasound study. Circulation. 2003; 108: 43-7.

19. Goldberg SL, Loussararian A, De Gregorio J, Di Mario C, Albiero R, Colombo A. Predictors of diffuse and aggressive intra-stent restenosis. J Am Coll Cardiol. 2001; 37 (4): 1019-25.

20. Saia F, Lemos PA, Sianos G, Degertekin M, Lee CH, Arampatzis CA, et al. Effectiveness of sirolimus-eluting stent implantation for recurrent in-stent restenosis after brachytherapy. Am J Cardiol. 2003; 92: 200-3.

21. Ajani AE, Waksman R, Cheneau E, Cha DH, McGlynn S, Castagna M, et al. The outcome of percutaneous coronary intervention in patients with in-stent restenosis who failed intracoronary radiation therapy. J Am Coll Cardiol. 2003; 41: 551-6.

22. Bossi I, Klersy C, Black AJ, Cortina R, Choussat R, Cassagneau B, et al. In-stent restenosis: long-term outcome and predictors of subsequent target lesion revascularization after repeat balloon angioplasty. J Am Coll Cardiol. 2000; 35: 1569-76.

23. Rodriguez A, Bernardi V, Navia J, Baldi J, Grinfeld L, Martinez J, et al. Argentine Randomized Study: Coronary Angioplasty with Stenting versus Coronary Bypass Surgery in patients with Multiple-Vessel Disease (ERACI II): 30-day and one-year follow-up results. ERACI II Investigators. J Am Coll Cardiol. 2001; 37: 51-8.

24. SoS Investigators. Coronary artery bypass surgery versus percutaneous coronary intervention with stent implantation in patients with multivessel coronary artery disease (the Stent or Surgery trial): a randomised controlled trial. Lancet. 2002; 360: 965-70.

25. de Feyter PJ, Serruys PW, Unger F, Beyar R, De Valk V, Milo S, et al. Bypass surgery versus stenting for the treatment of multivessel disease in patients with unstable angina compared with stable angina. Circulation. 2002; 105: 2367-72.

26. Hausleiter J, Kastrati A, Mehilli J, Dotzer F, Schuhlen H, Dirschinger J, et al., for the ISAR-SMART Trail investigators. Comparative analysis of stent placement versus balloon angioplasty in small coronary arteries with long narrowings (the Intracoronary Stenting or Angioplasty for Restenosis Reduction in Small Arteries [ISAR-SMART] Trial). Am J Cardiol. 2002; 89: 58-60.

27. Yock CA, Boothroyd DB, Owens DK, Winston C, Hlatky MA. Projected long-term costs of coronary stenting in multivessel coronary disease based on the experience of the Bypass Angioplasty Revascularization Investigation (BARI). Am Heart J. 2000; 140: 556-64.

28. Bakhai A, Stone G, Mahoney E, Lavelle TA, Schi C, Berezin RH, et al. Cost-effectiveness of paclitaxel-eluting stents for patients undergoing percutaneous coronary revascularization: results from the TAXUS-IV Trial. J Am Coll Cardiol. 2006; 48: 253-61.

29. Bowen J, Hopkins R, He Y, Blackhouse G, Lazzam C, Tu J, et al. Systematic review and cost-effectiveness analysis of drug eluting stents compared to bare metal stents for percutaneous coronary interventions in Ontario: interim report for the Ontario Ministry of Health and Long-Term Care. Hamilton, Ontario, Canada: Program for Assessment of Technology in Health, McMaster University; December 2005. Report No. HTA002–0512. Contract No. 06129. Available at: <http://www.path-hta.ca/DESreport.pdf>.

30. Mittmann N, Brown A, Seung SJ. Drug eluting stents: an economic evaluation. Ottawa: Canadian Coordinating Office for Health Technology Assessment; 2005. [Technology Overview, n. 15].

31. Brophy JM. The dollars and sense of drug-eluting stents. Can Med Assoc J. 2005; 172: 361-2.

32. Quadros AS, Gottschall CAM, Sarmento-Leite R. Custo-efetividade dos stents revestidos com drogas em vasos de grande calibre. Rev Bras Cardiol Invas. 2006; 14: 306-11.

33. Ryan J, Cohen DJ. Are drug-eluting stents cost-effective? It depends on whom you ask. Circulation. 2006; 114: 1736-44.

34. Eisenberg MJ. Drug-eluting stents. The price is not right. Circulation. 2006; 114: 1745-54.

35. Yakovou I, Schimidt T, Bonizzoni E, Ge L, Sangiorgi GM, Stankovic G, et al. Incidence, predictors, and outcome of thrombosis after successful stent implantation of drug-eluting stents. JAMA. 2005; 293: 2126-30.

36. Joner M, Finn AV, Farb A, Mont EK, Kolodgie FD, Ladich E, et al. Pathology of drug-eluted stents in humans: delayed healing and late thrombotic risk. J Am Coll Cardiol. 2006; 48: 193-202.

37. Colombo A, Corbett SJ. Drug-eluting stent thrombosis: increasingly recognized but too frequently overemphasized. J Am Coll Cardiol. 2006; 48: 203-5.

38. Nordmann AJ, Briel M, Bucher HC. Mortality in randomized controlled trials comparing drug-eluted vs. bare metal stents in coronary artery disease: a meta-analysis. Eur Heart J. 2006; 27: 2784-814.

39. Williams DO, Abbott JD, Kip KE, DEScover Investigators. Outcomes of 6,906 patients undergoing percutaneous coronary intervention in the era of drug-eluting stents: report of the DEScover Registry. Circulation. 2006; 114: 2154-62.

40. Chew DPB. Cost-effectiveness of drug-eluting stents: if only things were equal. They reduce rates of restenosis but not mortality or infarction – so are they worth it? Med J Aust. 2005; 182: 376-7.